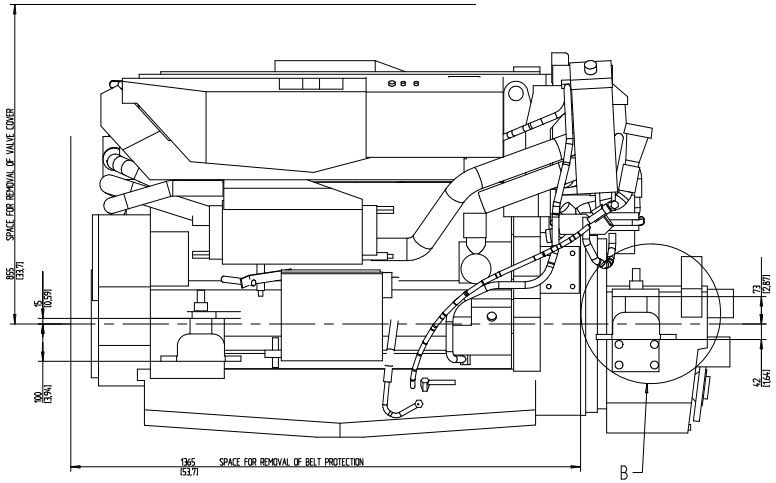

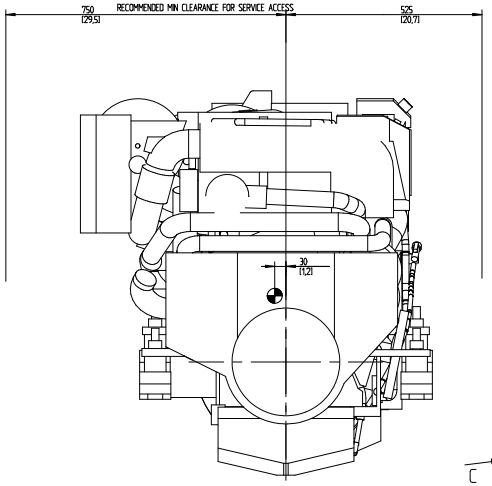

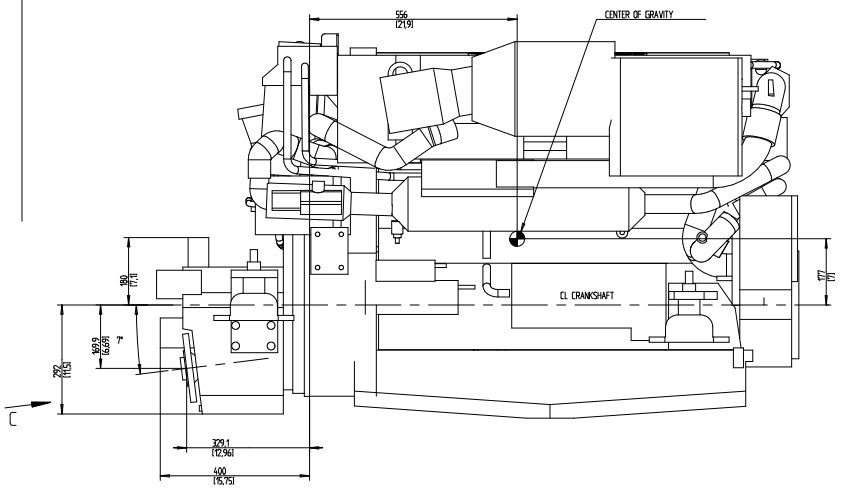

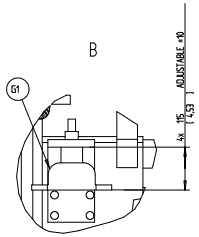

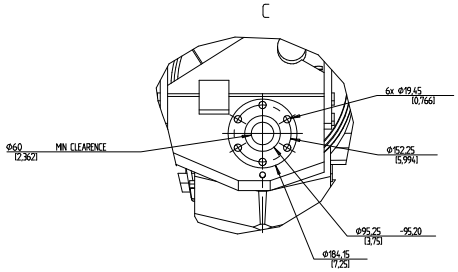

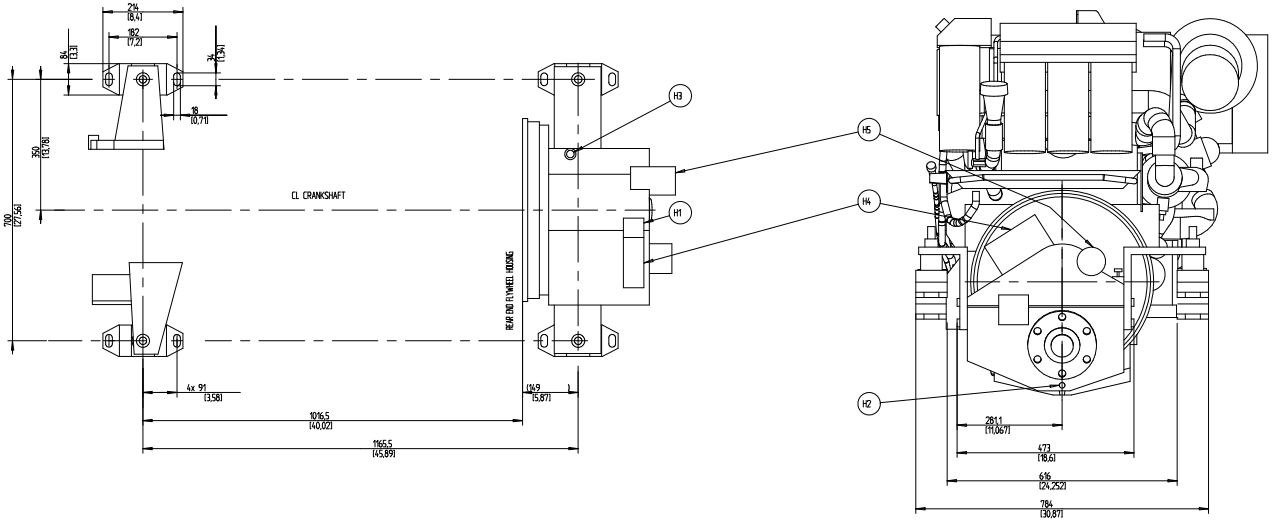

G1	ELASTIC SUSPENSION (4xx). (OPTION)
H1	OIL FILLER TRANSMISSION
H2	OIL DRAIN TRANSMISSION
H3	OIL DIPSTICK TRANSMISSION
H4	CONNECTION SHIFT SOLENOIDES
H5	OIL FILTER TRANSMISSION (OPTIONAL)

SCALE: 15

THIS DRAWING IS A COMPLEMENT TO 3591237

ENGINE INSTALLATION
D9 MARINE MG 5065 A

INSTALLATION DRAWING

VOLVO PENTA

3591411 | 02

Plus d'informations sur : www.dbmoteurs.fr